# BJE20A

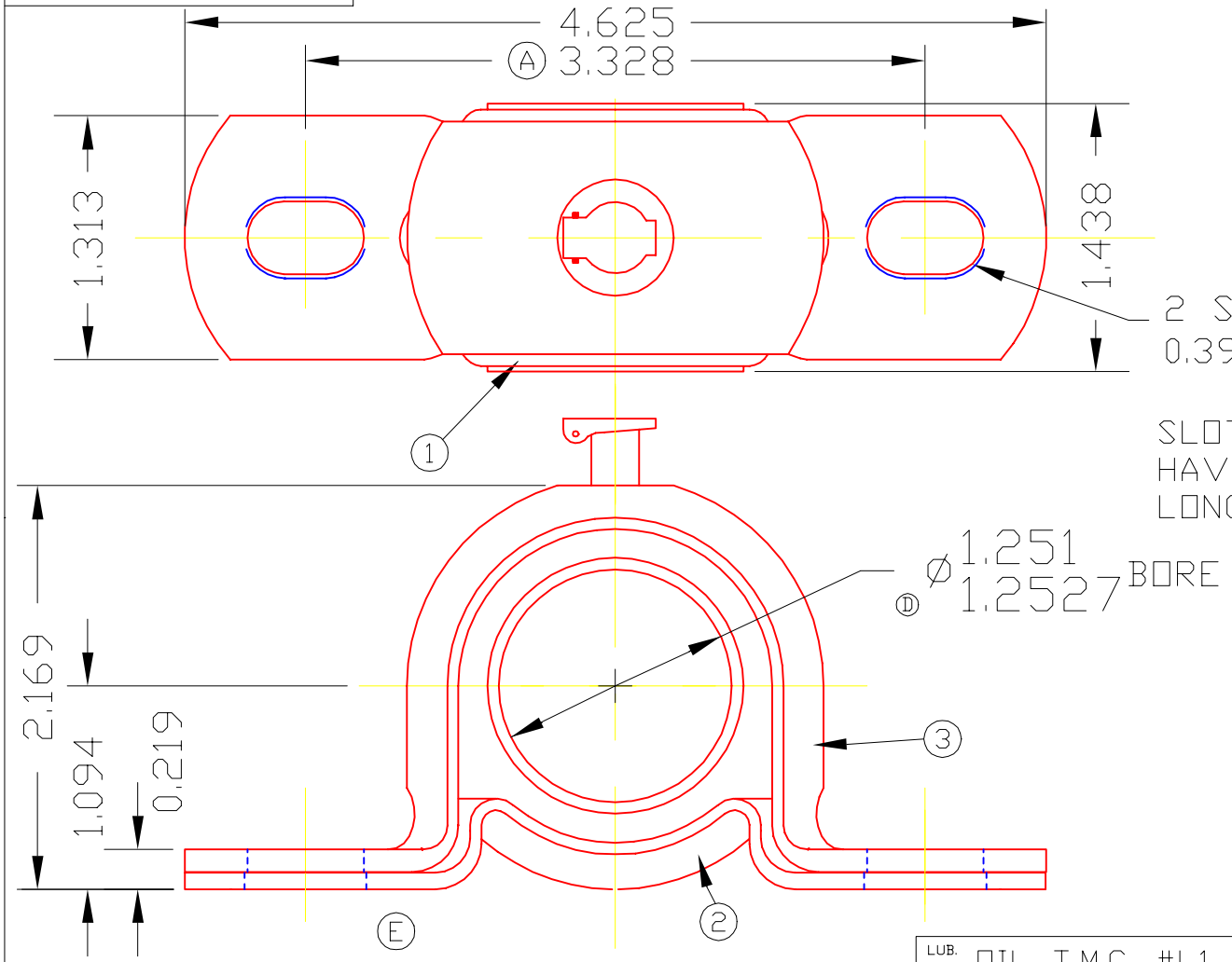


| DET | PART NUMBER | DESCRIPTION | AMT |
|---|---|---|---|
| 3 | E20A | BALL ASS'Y | 1 |
| 2 | 1048 | STRAP | 1 |
| 1 | 1047 | BASE | 1 |

TRIANGLE MANUFACTURING CO.
OSHKOSH, WI.

NAME PILLOW BLOCK ASS'Y

USED IN BJ SERIES

| | |
|---|---|
| LUB. | OIL T.M.C. #L1 |
| PLATING | GALV. |
| MATERIAL | SEE DETAILS |
| ALL DIMS. ±.020 UNLESS OTHERWISE SPECIFIED | |

| | |
|---|---|
| DATE | 7-31-62 |
| DRAWN | BW-88 |
| CHECKED | SP |
| SCALE | 1 / 1 |

PART NO. BJE20A

| CHANGE LEVEL | |
|---|---|
| G | 06-10-03 |