BDN10

NOTE: ASSEMBLY TO FIT GAGE THAT HAS .250 DIA. PINS ON 1.750±.001 CENTERS. WITH BALL IN MOUNTING P\N-4006 (G)

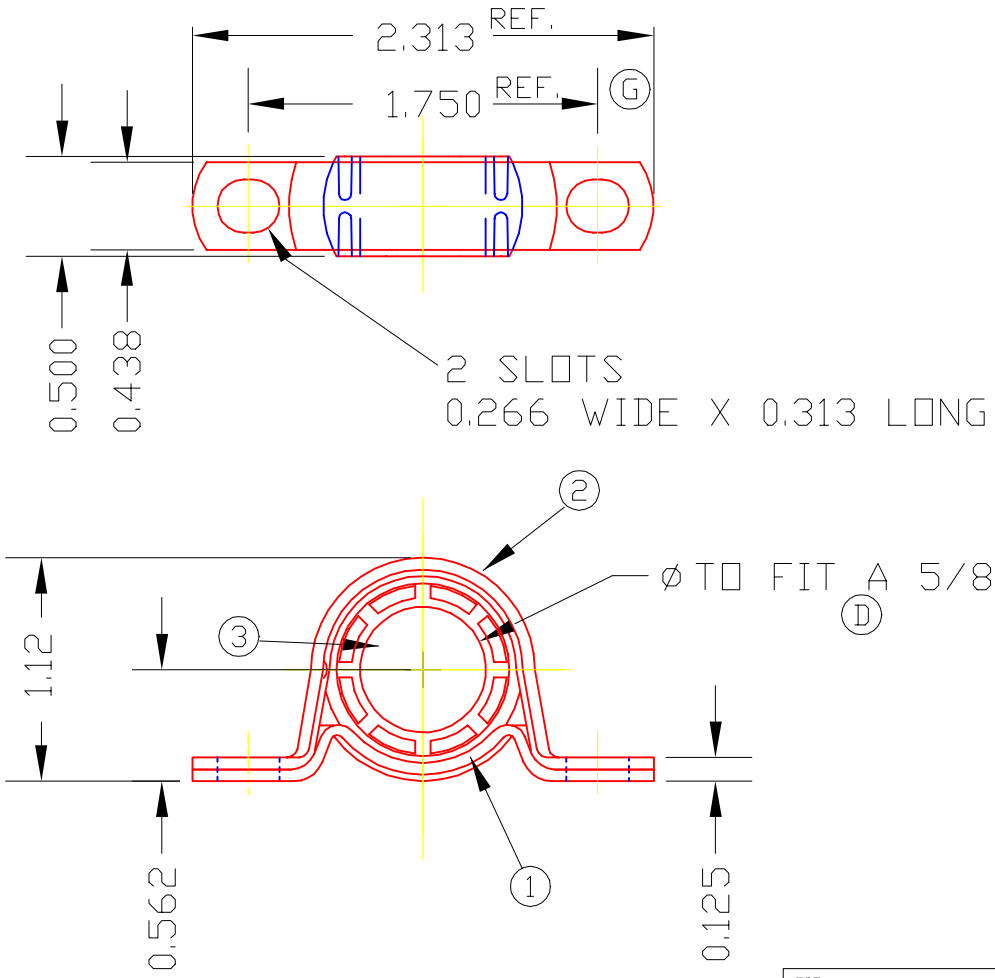

SLOTS IN BASE & CONTAINER MAY HAVE SLIGHT MISALIGNMENT IN THE LONG DIRECTION. (F)

DET	PART NUMBER	DESCRIPTION	AMT
3	N10	BALL ASS'Y	1
2	3688	STRAP	1
1	3687	BASE	1

TRIANGLE MANUFACTURING CO.
OSHKOSH, WI.

NAME PILLOW BLOCK BEARING

USED IN ////

FIT	////
PLATING	GALV
MATERIAL	SEE DETAILS

ALL DIMS. ±.020 UNLESS OTHERWISE SPECIFIED

DATE	2-4-70
DRAWN	BW-88
CHECKED	MJK
SCALE	1 / 1

PART NO. BDN10

CHANGE LEVEL	
G	06-24-03